FEMALE END VIEW

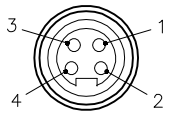

PAIR
1 = BLUE
2 = BROWN
3 = DRAIN
4 = GREEN/YELLOW

SPECIFICATIONS

CONTACT CARRIER MATERIAL	TPV
CONNECTOR BODY MATERIAL	STAINLESS STEEL/PASSIVATED
CONTACT MATERIAL/PLATING	BRASS/GOLD
COUPLING NUT MATERIAL/FINISH	STAINLESS STEEL/PASSIVATED
GROMMET MATERIAL	TPU
RATED CURRENT [A] (@70°C)	8.0 A
RATED VOLTAGE [V]	250 V
PROTECTION CLASS	NEMA 1,3,4,4X,6P,12 & IECIP67,IP68,IP69,IP69K
OUTER JACKET MATERIAL/COLOR	EX60/BLACK
CONDUCTOR INSULATION MATERIAL	XLPE
CONDUCTORS	3x18 AWG
DRAIN/SHIELD	20 AWG/ALUMINUM–POLYESTER FOIL
CONDUCTOR ARRANGEMENT	1 SHIELDED TWISTED PAIR w/DRAIN, 1 GROUND
CABLE TEMPERATURE RATING	–60°C to +105°C (–76°F to +221°F)
CABLE APPROVALS	UL: TC–ER/ITC–ER/PLTC–ER, 105C, 600V; –40C COLD IMPACT; –60C COLD BEND CSA: CIC/TC, DIRECT BURIAL, 90C, 600V; –40C COLD IMPACT; –60C COLD BEND UL 1309 MARINE SHIPBOARD; ABS CERTIFIED; IEEE 1202/FT4; IEEE 1580; IEC 60332–3–22
APPROVAL MARKING ON DEVICE	FM APPROVED IECEx FMG 16.0032X 3 G Ex nA IIC T5 Gc; 3 G Ex eb IIC T5 Gb; Cl I, Zn 2, AEx nA IIC T5 Gc; Cl I, Zn 2, AEx ec IIC T5 Gc; Cl, Zn 1, AEx eb IIC T5 Gb, Cl Div 2, Grp A, B, C, D T5 FM15ATEX0066X II 3 G Ex nA IIC T5 Gc; II 3 G Ex ec IIC T5 Gc; FM15ATEX0018X II 2 G Ex eb IIC T5 Gb -40°C ≤ Ta ≤ 70°C (≤ 90°C with I ≤ 600mA)

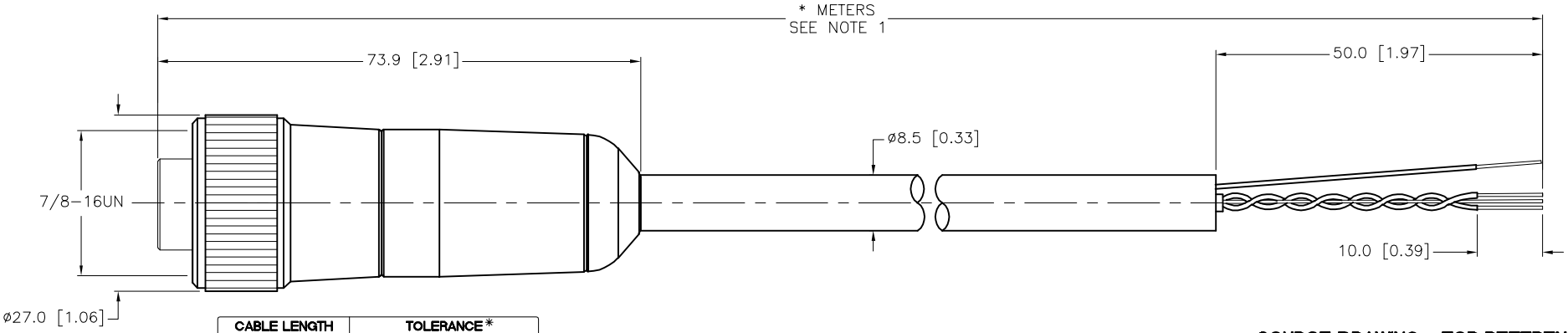

CABLE LENGTH	TOLERANCE *
ALL LENGTHS	+ 4% (OR 50mm) OF LENGTH – 0% (OR 0mm) OF LENGTH WHICHEVER IS GREATER
STRIP LENGTH	**TOLERANCE ***
0–7mm	±0.5mm
8–29mm	±1.0mm
30–49mm	±2.0mm
50–69mm	±3.0mm
70–100mm	±4.0mm
OVER 100mm	±5.0mm
* UNLESS OTHERWISE SPECIFIED	

SOURCE DRAWING - FOR REFERENCE ONLY

NOTES:

1. "*" INDICATES CABLE LENGTH IN METERS. CONTACT TURCK TO ORDER SPECIFIC LENGTHS.

REV	DESCRIPTION	BY	DATE	ECO NO.
H	UPDATE APPROVAL MARKING	NF	07/15/24	80401

RELATED DOCUMENTS
1.
2.
3.
4.

3RD ANGLE PROJECTION

THIS DRAWING IS CONFIDENTIAL AND THE PROPERTY OF TURCK INC. USE OF THIS DOCUMENT WITHOUT WRITTEN PERMISSION IS PROHIBITED.

TURCK

3000 CAMPUS DRIVE
MINNEAPOLIS, MN 55441
1–800–544–7769
(763) 553–7300
(763) 553–0708 fax
www.turck.us

MATERIAL: SEE SPECIFICATIONS

FINISH: SEE SPECIFICATIONS

ALL DIMENSIONS DISPLAYED ON THIS DRAWING ARE FOR REFERENCE ONLY

CONTACT TURCK FOR MORE INFORMATION

DRFT: RDS | DATE: 11/04/15
APVD: J.B. | SCALE: 1=1.0

UNIT OF MEASUREMENT
MILLIMETER [INCH]

DO NOT SCALE THIS DRAWING

DESCRIPTION: P–X–RKVZ 40–1188XL–*M

IDENTIFICATION NO.

REV: H

FILE: 777036291

SHEET 1 OF 1